H/HC Type Pressure Control Valves

These valves are hydraulically damped, direct operated, pressure control valves which can be actuated by internal or external pilot pressure.

H Type Pressure Control Valves

There are various types of valve including sequence, unloading and low pressure relief valves, all of which are operated by a pressure rise in the circuit, sensed either internally or remotely.

HC Type Pressure Control Valves

They are available with integral check valves for use when free reverse flow from secondary port to the primary port is desired. There are various types of valve including sequence and counterbalance valves, all of which are operated by a pressure rise in the circuit, sensed either internally or remotely.

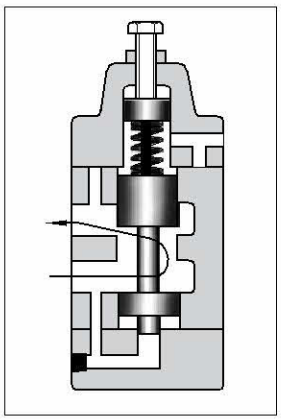

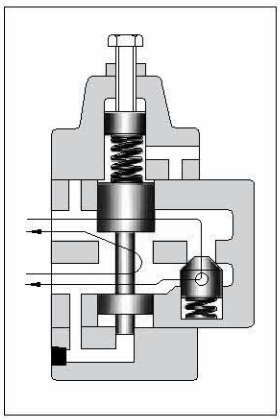

Specifications

Series	Model Numbers		Max. Operating Pres. MPa (PSI)	Max. Flow L/min (U.S.GPM)	Approx. Mass kg (lbs.)	
	Threaded Connection	Sub-plate Mounting			Threaded Connection	Sub-plate Mounting
H Type Pressure Control Valves	HT-03-∗∗-∗-22/2280/2290	HG-03-∗∗-∗-22/2290	21(3050)	50 (13.2)	3.7 (8.2)	4.0 (8.8)
	HT-06-∗∗-∗-22/2280/2290	HG-06-∗∗-∗-22/2290		125 (33)	6.2 (13.7)	6.1 (13.5)
	HT-10-∗∗-∗-22/2280/2290	HG-10-∗∗-∗-22/2290		250 (66)	12.0 (26.5)	11.0 (24.3)
HC Type Pressure Control Valves	HCT-03-∗∗-∗-22/2280/2290	HCG-03-∗∗-∗-22/2290	21(3050)	50 (13.2)	4.1 (9.0)	4.8 (10.6)
	HCT-06-∗∗-∗-22/2280/2290	HCG-06-∗∗-∗-22/2290		125 (33)	7.1 (15.7)	7.4 (16.3)
	HCT-10-∗∗-∗-22/2280/2290	HCG-10-∗∗-∗-22/2290		250 (66)	13.8 (30.4)	13.8 (30.4)

● For check valve pressure drops of HC type, see free flow pressure drop characteristics described on page 247.

Yuken can offer flanged connection valves described below.
For details, contact us.

Model Numbers	Max. Operating Pressure MPa (PSI)	Max. flow L/min (U.S.GPM)
HF/HCF-10-∗∗-∗-22/2290	21 (3050)	250(66)
HF/HCF-16-∗∗-∗-20/2090		500(132)

Model Number Designation

F-	H	T	-03	-C	3	-P	-22	*
Special Seals	Series Number	Type of Mounting	Valve Size	Pres. Adj. Range MPa (PSI)	Valve Type ★1	With Auxiliary Pilot Pressure	Design Number	Design Standards
F: Special Seals for Phosphate Ester Type Fluids (Omit if not required)	H: H Type Pressure Control Valves	T: Threaded Connection	03	L: 0.25 - 0.45 (36 - 65) M: 0.45 - 0.9 (65 - 130) N: 0.9 - 1.8 (130 - 260) A: 1.8 - 3.5 (260 - 510) B: 3.5 - 7.0 (510 - 1020) C: 7.0 - 14 (1020 - 2030)	1 ★2 2 3 4	P: With Auxiliary Pilot Pressure ★3	22	None: Japanese Std. "JIS" 80: European Design Std. 90: N. American Design Std.
			06				22	
			10				22	
		G: Sub-plate Mounting	03				22	None: Japanese Std. "JIS" & European Design Std. 90: N. American Design Std.
			06				22	
			10				22	
	HC: HC Type Pressure Control Valves	T: Threaded Connection	03		1 2 3 4		22	None: Japanese Std. "JIS" 80: European Design Std. 90: N. American Design Std.
			06				22	
			10				22	
		G: Sub-plate Mounting	03				22	None: Japanese Std. "JIS" & European Design Std. 90: N. American Design Std.
			06				22	
			10				22	

★1. For the details of valve types, see the following page.
★2. Type 1 is only possible for pressure adjustment ranges L and M.
★3. Models with auxiliary pilots are used where valves must be operated under a lower external pilot pressure than the adjusted pressure (types N, A, and B: about 1/8 of adjusted pressure; type C: about 1/16). This does not apply to pressure adjustment ranges L and M and valve type 1.

Instructions

- To adjust the pressure, loosen the lock nut and turn the pressure adjustment screw slowly clockwise to increase pressures or anti-clockwise to decrease pressures. After adjustments, do not forget to tighten the lock nut.
- Connect the secondary side pressure ports of types 1 and 4 (internal drain) and the drain ports of types 2 and 3 (external drain) directly to the reservoir with a back pressure close to the atmospheric pressure.
- There are two threaded connection primary pressure ports. They can be connected each other in-line; one as inlet and the other as an outlet or the valve can be used by plugging one of the pressure ports.

Sub-plate

Valve Model Numbers	Japanese Standard "JIS"		European Design Standard		N.American Design Standard		Approx. Mass kg (lbs.)
	Sub-plate Model Numbers	Thread Size	Sub-plate Model Numbers	Thread Size	Sub-plate Model Numbers	Thread Size	
HG HCG-03-**	HGM-03-20	Rc 3/8	HGM-03-2080	3/8 BSP.F	HGM-03-2090	3/8 NPT	1.6 (3.5)
	HGM-03X-20	Rc 1/2	HGM-03X-2080	1/2 BSP.F	HGM-03X-2090	1/2 NPT	1.6 (3.5)
HG HCG-03-**-P	HGM-03-P-20	Rc 3/8	HGM-03-P-2080	3/8 BSP.F	HGM-03-P-2090	3/8 NPT	2.0 (4.4)
	HGM-03X-P-20	Rc 1/2	HGM-03X-P-2080	1/2 BSP.F	HGM-03X-P-2090	1/2 NPT	2.0 (4.4)
HG HCG-06-**	HGM-06-20	Rc 3/4	HGM-06-2080	3/4 BSP.F	HGM-06-2090	3/4 NPT	2.4 (5.3)
	HGM-06X-20	Rc 1	HGM-06X-2080	1 BSP.F	HGM-06X-2090	1 NPT	3.0 (6.6)
HG HCG-06-**-P	HGM-06-P-20	Rc 3/4	HGM-06-P-2080	3/4 BSP.F	HGM-06-P-2090	3/4 NPT	2.4 (5.3)
	HGM-06X-P-20	Rc 1	HGM-06X-P-2080	1 BSP.F	HGM-06X-P-2090	1 NPT	3.0 (6.6)
HG HCG-10-**	HGM-10-20	Rc 1-1/4	HGM-10-2080	1-1/4 BSP.F	HGM-10-2090	1-1/4 NPT	4.8 (10.6)
	HGM-10X-20	Rc 1-1/2	HGM-10X-2080	1-1/2 BSP.F	HGM-10X-2090	1-1/2 NPT	5.7 (12.6)
HG HCG-10-**-P	HGM-10-P-20	Rc 1-1/4	HGM-10-P-2080	1-1/4 BSP.F	HGM-10-P-2090	1-1/4 NPT	4.8 (10.6)
	HGM-10X-P-20	Rc 1-1/2	HGM-10X-P-2080	1-1/2 BSP.F	HGM-10X-P-2090	1-1/2 NPT	5.7 (12.6)

- Sub-plates are available. Specify the sub-plate model number from the table above. When sub-plates are not used, the mounting surface should have a good machined finish.

Attachment

Mounting Bolts

Valve Model Numbers	Socket Head Cap Screw		Qty.
	Japanese Std. "JIS" and European Design Std.	N. American Design Std.	
HG-03	M10×50 Lg.	3/8 -16 UNC×2 Lg.	4
HG-06	M10×50 Lg.	3/8 -16 UNC×2 Lg.	4
HG-10	M10×50 Lg.	3/8 -16 UNC×2 Lg.	6
HCG-03	M10×70 Lg.	3/8 -16 UNC×2-3/4 Lg.	4
HCG-06	M10×80 Lg.	3/8 -16 UNC×3-1/4 Lg.	4
HCG-10	M10×90 Lg.	3/8 -16 UNC×3-1/2 Lg.	6

Valve Types

H Type

Valve Type	Type 1: Low Pres. Relief Valve	Type 2: Sequence Valve	Type 3: Sequence Valve	Type 4: Unloading Valve
Pilot-Drain Type	Internal Pilot-Internal Drain	Internal Pilot-External Drain	External Pilot-External Drain	External Pilot-Internal Drain
Operations	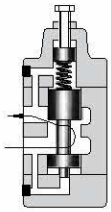	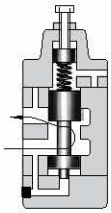	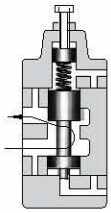	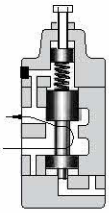
Graphic Symbols		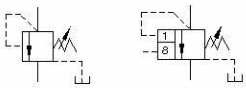 With auxiliary pilot port	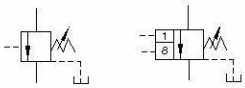 With auxiliary pilot port	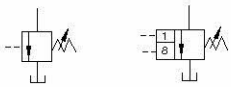 With auxiliary pilot port
Description	Can be used as low-pressure relief valve, but be careful to occurrence of surge pressure.	Used to control the operational sequence of two or more actuators. If primary pressure exceeds the pressure setting, effective fluid is delivered to the secondary side.	Used for the same purpose as for the type 2. Operated by external pilot pressure irrespective of primary pressure.	Used as unloading valve. If external pilot pressure exceeds the pressure setting, the pump is turned no-load by releasing all fluid to the tank.

HC Type

Valve Type	Type 1: Counterbalance Valve	Type 2: Sequence and Check Valve	Type 3: Sequence and Check Valve	Type 4: Counterbalance Valve
Pilot-Drain Type	Internal Pilot-Internal Drain	Internal Pilot-External Drain	External Pilot-External Drain	External Pilot-Internal Drain
Operations	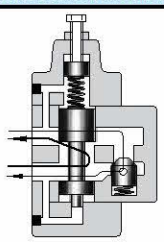	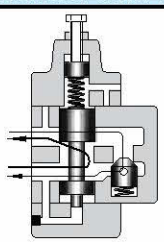	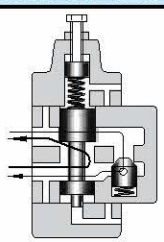	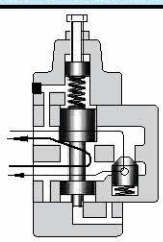
Graphic Symbols	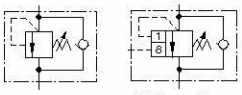 With auxiliary pilot port	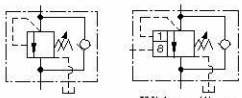 With auxiliary pilot port	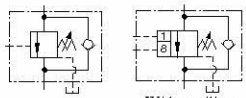 With auxiliary pilot port	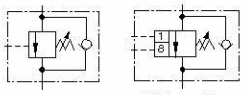 With auxiliary pilot port
Descriptions	Used to prevent gravitational falls by generating a pressure on the actuator return side. If primary pressure exceeds the pressure setting, fluid is released to keep the pressure constant.	Used to control the operating sequence of two or more actuators. If primary pressure exceeds the pressure setting, effective fluid is delivered to the secondary side. Reversed flow is free by a check valve.	Used for the same purpose as for type 2. Operated by external pilot pressure irrespective of primary pressure. Reversed flow is free by a check valve.	Used for the same purpose as for type 1. Operated by external pilot pressure irrespective of primary pressure. Reversed flow is free by a check valve.

HT-03, 06, 10-✻✻-✻-22/2280/2290

DIMENSIONS IN MILLIMETRES (INCHES)

Type 3: Sequence Valve
(External Pilot, External Drain)

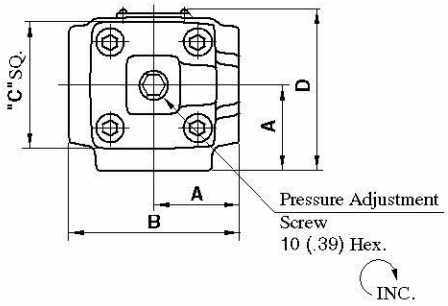

Model Numbers	Thread Size		
	"Q" Thd.	"S" Thd.	"T" Thd.
HT-03, 22	Rc 3/8	Rc 1/4	Rc 1/4
HT-06, 22	Rc 3/4		
HT-10, 22	Rc 1-1/4		
HT-03, 2280	3/8 BSP.F	1/4 BSP.F	1/4 BSP.Tr
HT-06, 2280	3/4 BSP.F		
HT-10, 2280	1-1/4 BSP.F		
HT-03, 2290	3/8 NPT	1/4 NPT	1/4 NPT
HT-06, 2290	3/4 NPT		
HT-10, 2290	1-1/4 NPT		

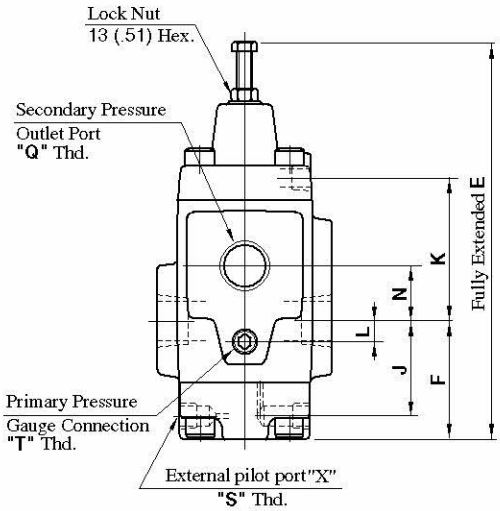

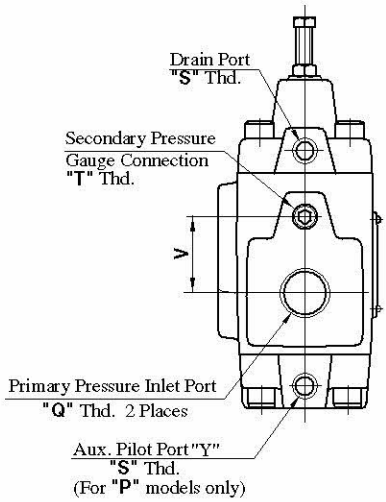

Model Numbers	Dimensions mm (Inches)										
	A	B	C	D	E	F	J	K	L	N	V
HT-03	41 (1.61)	82 (3.23)	60 (2.36)	74 (2.91)	191 (7.52)	57 (2.24)	43 (1.69)	70 (2.76)	0 (0)	28 (1.10)	28 (1.10)
HT-06	48 (1.89)	96 (3.78)	73 (2.87)	87 (3.43)	221 (8.70)	64.5 (2.54)	50.5 (1.99)	80.5 (3.17)	9 (.35)	33 (1.30)	42 (1.65)
HT-10	66 (2.60)	132 (5.20)	86 (3.39)	112 (4.41)	272 (10.71)	84 (3.31)	66 (2.60)	98 (3.86)	12 (.47)	40 (1.57)	52 (2.05)

Type 1: Low Pressure Relief Valve
(Internal Pilot, Internal Drain)

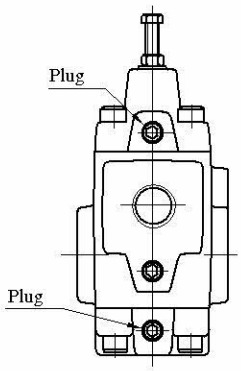

Type 2: Sequence Valve
(Internal Pilot, External Drain)

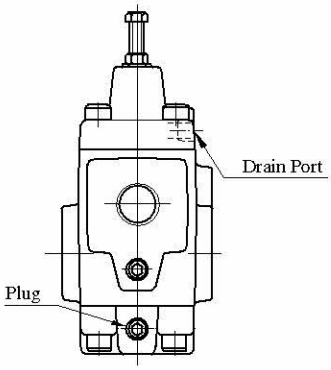

Type 4: Unloading Valve
(External Pilot, Internal Drain)

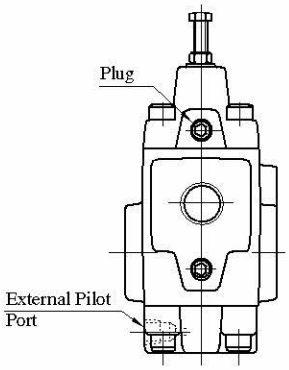

HG-03, 06-✻✻-✻-22/2290

Mounting Surface
HG-03: ISO 5781-AG-06-2-A
HG-06: ISO 5781-AH-08-2-A

Type 3: Sequence Valve
(External Pilot, External Drain)

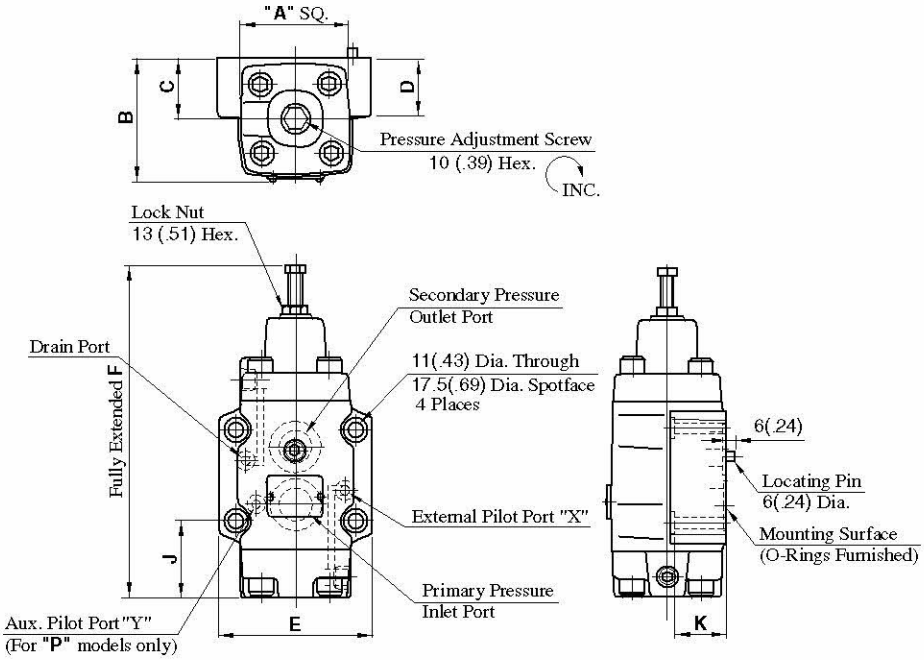

Model Numbers	Dimensions mm (Inches)							
	A	B	C	D	E	F	J	K
HG-03	60 (2.36)	67 (2.64)	35 (1.38)	39 (1.54)	89 (3.50)	191 (7.52)	49.6 (1.95)	38 (1.50)
HG-06	73 (2.87)	79 (3.11)	40 (1.57)	39 (1.54)	102 (4.02)	221 (8.70)	51 (2.01)	38 (1.50)

Type 1: Low Pressure Relief Valve
(Internal Pilot, Internal Drain)

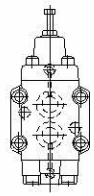

Type 2: Sequence Valve
(Internal Pilot, External Drain)

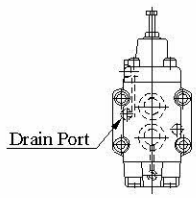

Type 4: Unloading Valve
(External Pilot, Internal Drain)

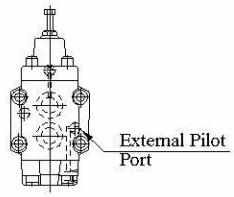

HG-10-✻✻-✻-22/2290

Mounting Surface
ISO 5781-AJ-10-2-A

Type 3: Sequence Valve
(External Pilot, External Drain)

DIMENSIONS IN MILLIMETRES (INCHES)

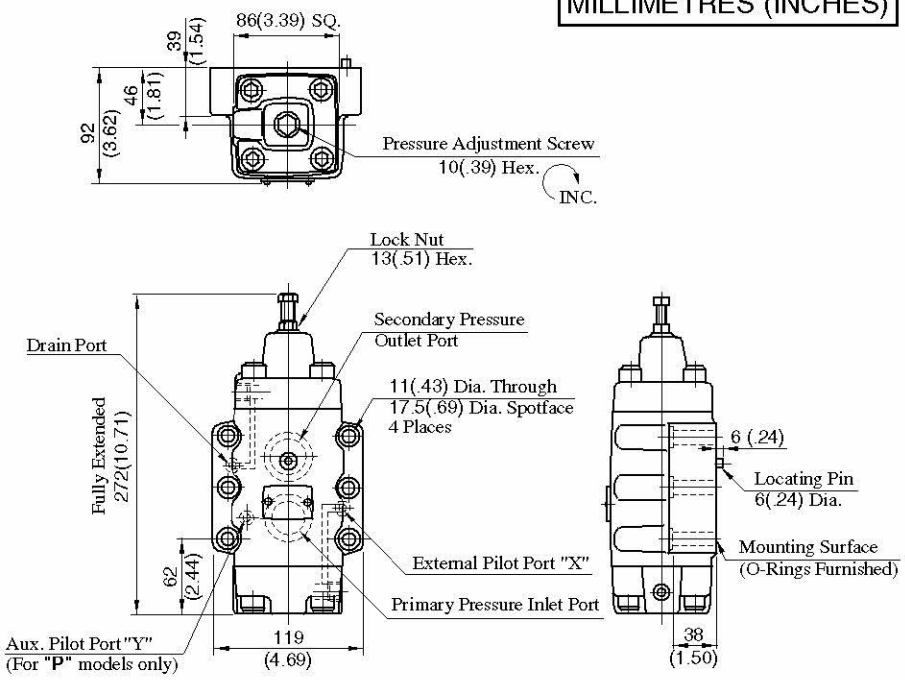

Type 1: Low Pressure Relief Valve
(Internal Pilot, Internal Drain)

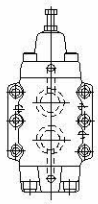

Type 2: Sequence Valve
(Internal Pilot, External Drain)

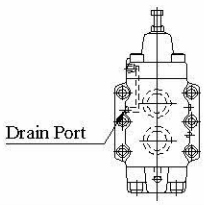

Type 4: Unloading Valve
(External Pilot, Internal Drain)

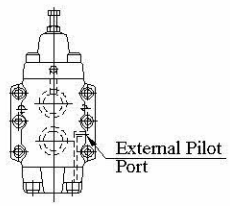

HCT-03, 06, 10-**-*-22/2280/2209

Type 3: Sequence and Check Valve
(External Pilot, External Drain)

DIMENSIONS IN MILLIMETRES (INCHES)

Model Numbers	Thread Size		
	"Q" Thd.	"S" Thd.	"T" Thd.
HCT-03, 22	Rc 3/8	Rc 1/4	Rc 1/4
HCT-06, 22	Rc 3/4		
HCT-10, 22	Rc 1-1/4		
HCT-03, 2280	3/8 BSP.F	1/4 BSP.F	1/4 BSP.Tr
HCT-06, 2280	3/4 BSP.F		
HCT-10, 2280	1-1/4 BSP.F		
HCT-03, 2290	3/8 NPT	1/4 NPT	1/4 NPT
HCT-06, 2290	3/4 NPT		
HCT-10, 2290	1-1/4 NPT		

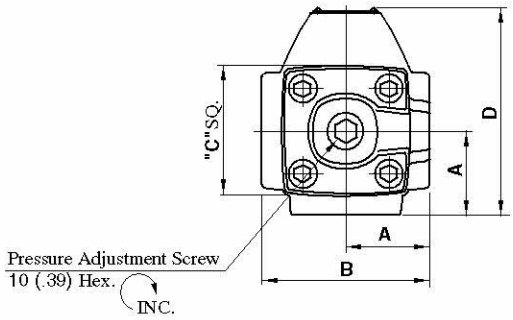

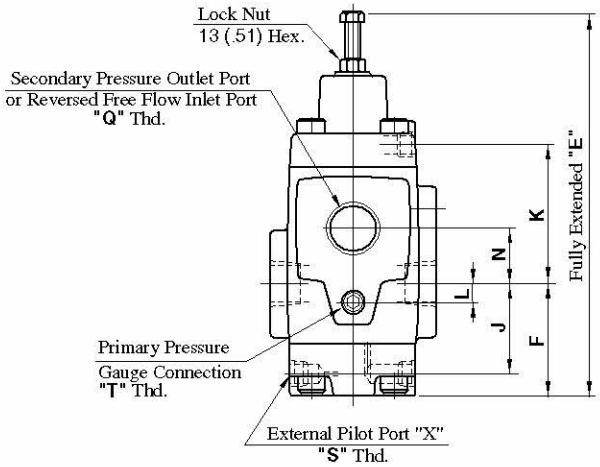

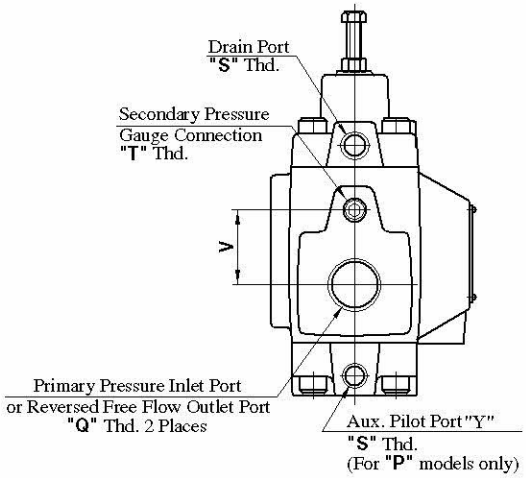

Model Numbers	Dimensions mm (Inches)										
	A	B	C	D	E	F	J	K	L	N	V
HCT-03	41 (1.61)	82 (3.23)	60 (2.36)	96 (3.78)	191 (7.52)	57 (2.24)	43 (1.69)	70 (2.76)	0 (0)	28 (1.10)	28 (1.10)
HCT-06	48 (1.89)	96 (3.78)	73 (2.87)	116 (4.57)	221 (8.70)	64.5 (2.54)	50.5 (1.99)	80.5 (3.17)	9 (.35)	33 (1.30)	42 (1.65)
HCT-10	66 (2.60)	132 (5.20)	86 (3.39)	152 (5.98)	272 (10.71)	84 (3.31)	66 (2.60)	98 (3.86)	12 (.47)	40 (1.57)	52 (2.05)

Type 1: Counterbalance Valve
(Internal Pilot, Internal Drain)

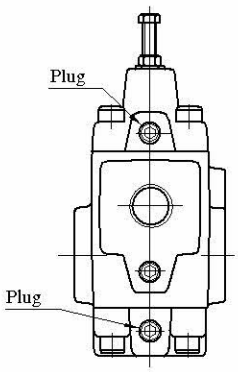

Type 2: Sequence and Check Valve
(Internal Pilot, External Drain)

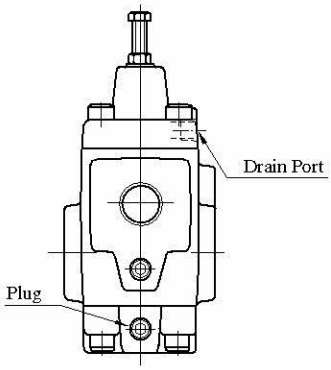

Type 4: Counterbalance Valve
(External Pilot, Internal Drain)

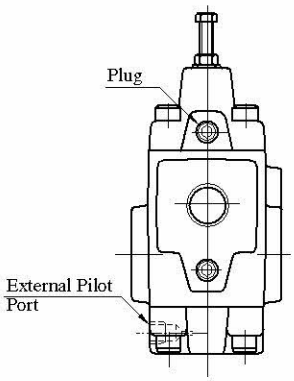

HCG-03, 06-✻✻-✻-22/2290

Mounting Surface
HCG-03: ISO 5781-AG-06-2-A
HCG-06: ISO 5781-AH-08-2-A

Type 3: Sequence and Check Valve
(External Pilot, External Drain)

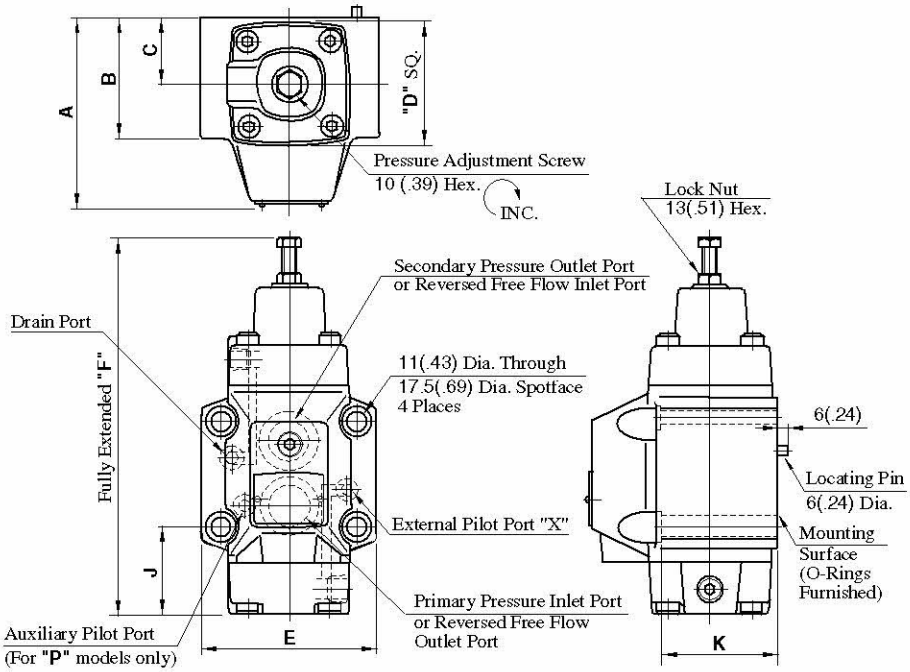

Model Numbers	Dimensions mm (Inches)							
	A	B	C	D	E	F	J	K
HCG-03	90 (3.54)	59 (2.32)	35 (1.38)	60 (2.36)	89 (3.50)	191 (7.52)	49.6 (1.95)	58 (2.28)
HCG-06	108 (4.25)	69 (2.72)	40 (1.57)	73 (2.87)	102 (4.02)	221 (8.70)	51 (2.01)	68 (2.68)

Type 1: Counterbalance Valve
(Internal Pilot, Internal Drain)

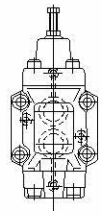

Type 2: Sequence and Check Valve
(Internal Pilot, External Drain)

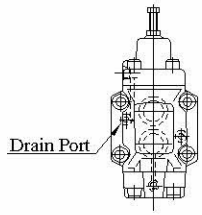

Type 4: Counterbalance Valve
(External Pilot, Internal Drain)

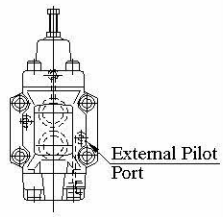

HCG-10-✻✻-✻-22/2290

Mounting Surface
ISO 5781-AJ-10-2-A

Type 3: Sequence and Check Valve
(External Pilot, External Drain)

DIMENSIONS IN MILLIMETRES (INCHES)

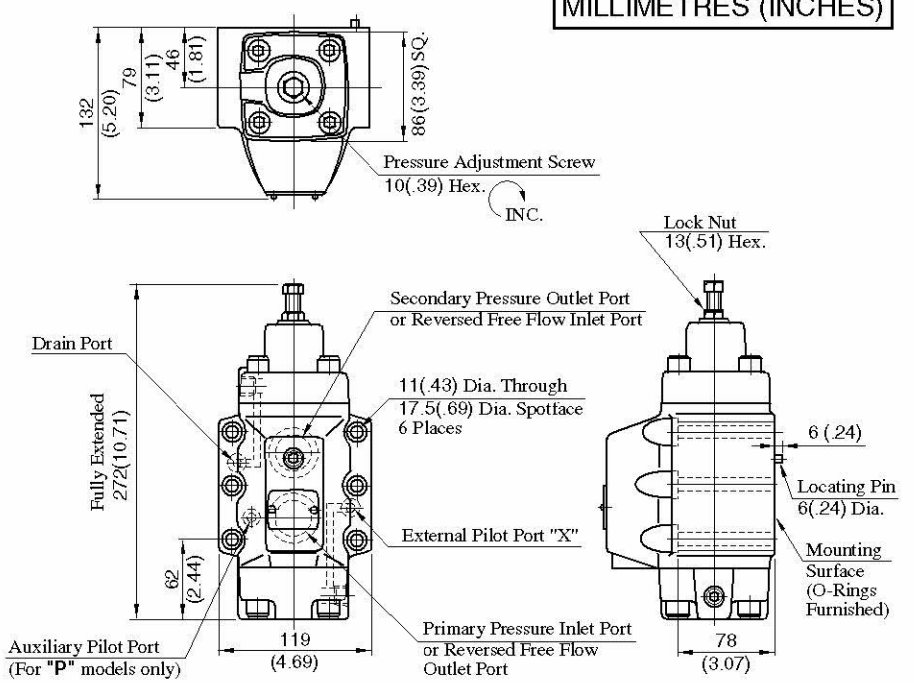

Type 1: Counterbalance Valve
(Internal Pilot, Internal Drain)

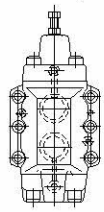

Type 2: Sequence and Check Valve
(Internal Pilot, External Drain)

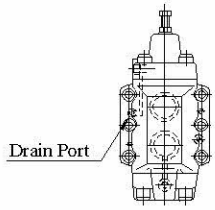

Type 4: Counterbalance Valve
(External Pilot, Internal Drain)

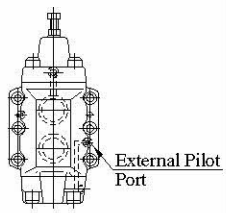

HGM-03-20/2080/2090
HGM-03X-20/2080/2090

DIMENSIONS IN MILLIMETRES (INCHES)

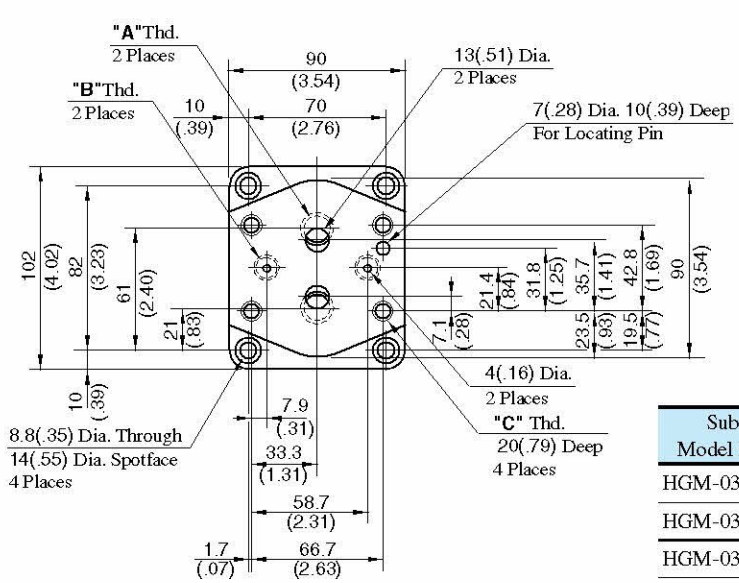

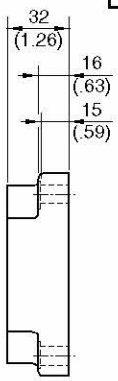

Sub-plate Model Numbers	"A" Thd.	"B" Thd.	"C" Thd.
HGM-03-20	Rc 3/8	Rc 1/4	M10
HGM-03X-20	Rc 1/2		
HGM-03-2080	3/8 BSP.F	1/4 BSP.F	
HGM-03X-2080	1/2 BSP.F		
HGM-03-2090	3/8 NPT	1/4 NPT	3/8-16 UNC
HGM-03X-2090	1/2 NPT		

With Auxiliary Pilot Pressure Port
HGM-03-P-20/2080/2090
HGM-03X-P-20/2080/2090

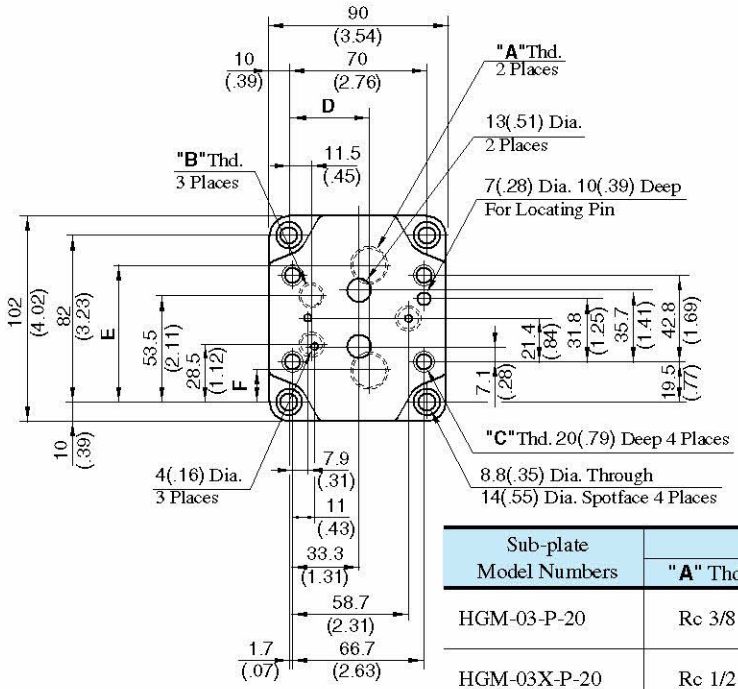

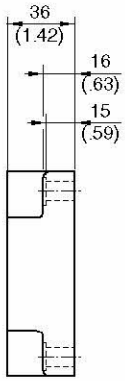

Sub-plate Model Numbers	Thread Size			Dimensions mm(Inches)		
	"A" Thd.	"B" Thd.	"C" Thd.	D	E	F
HGM-03-P-20	Rc 3/8	Rc 1/4	M 10	35 (1.38)	69.5 (2.74)	12.5 (.49)
HGM-03X-P-20	Rc 1/2			41 (1.61)	67.5 (2.66)	14.5 (.57)
HGM-03-P-2080	3/8 BSP.F	1/4 BSP.F		35 (1.38)	69.5 (2.74)	12.5 (.49)
HGM-03X-P-2080	1/2 BSP.F			41 (1.61)	67.5 (2.66)	14.5 (.57)
HGM-03-P-2090	3/8 NPT	1/4 NPT	3/8-16 UNC	35 (1.38)	69.5 (2.74)	12.5 (.49)
HGM-03X-P-2090	1/2 NPT			41 (1.61)	67.5 (2.66)	14.5 (.57)

DIMENSIONS IN MILLIMETRES (INCHES)

HGM-06-20/2080/2090
HGM-06-P-20/2080/2090

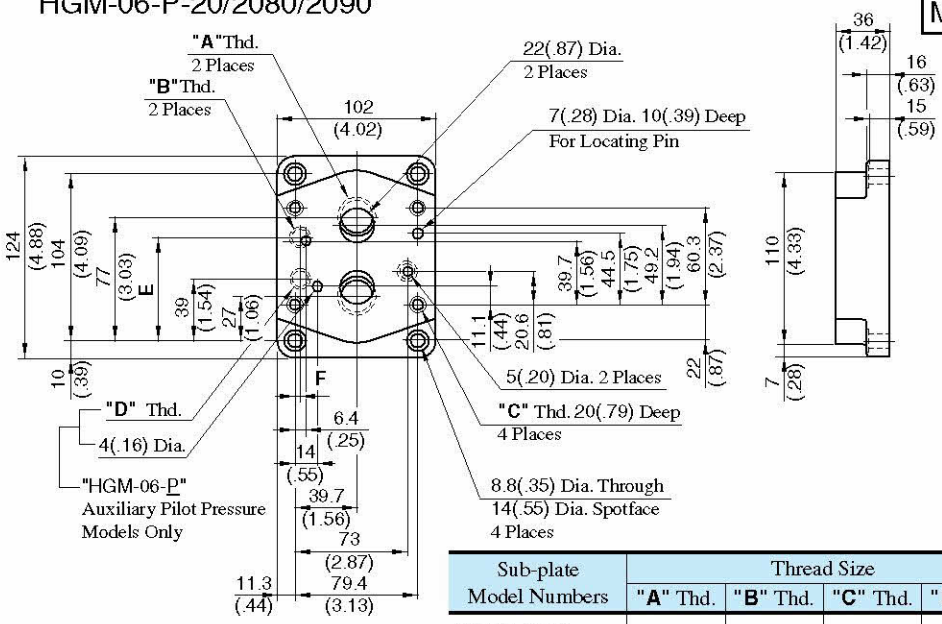

Sub-plate Model Numbers	Thread Size				Dimensions mm(Inches)	
	"A" Thd.	"B" Thd.	"C" Thd.	"D" Thd.	E	F
HGM-06-20	Rc 3/4	Rc 1/4	M10	Rc 1/4	61.7 (2.43)	6.4 (.25)
HGM-06-P-20					64 (2.52)	3 (.12)
HGM-06-2080	3/4 BSP.F	1/4 BSP.F		1/4 BSP.F	61.7 (2.43)	6.4 (.25)
HGM-06-P-2080					64 (2.52)	3 (.12)
HGM-06-2090	3/4 NPT	1/4 NPT	3/8-16 UNC	1/4 NPT	61.7 (2.43)	6.4 (.25)
HGM-06-P-2090					64 (2.52)	3 (.12)

HGM-06X-20/2080/2090
HGM-06X-P-20/2080/2090

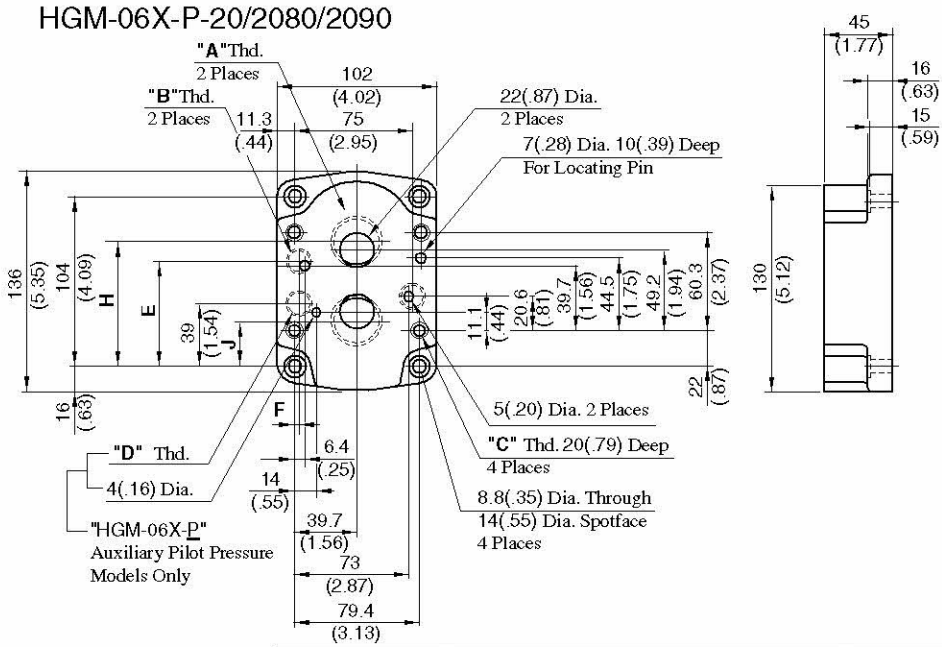

Sub-plate Model Numbers	Thread Size				Dimensions mm(Inches)			
	"A" Thd.	"B" Thd.	"C" Thd.	"D" Thd.	E	F	H	J
HGM-06X-20	Rc 1	Rc 1/4	M10	Rc 1/4	61.7 (2.43)	6.4 (.25)	82.3 (3.24)	22 (.87)
HGM-06X-P-20					64 (2.52)	3 (.12)		
HGM-06X-2080	1 BSP.F	1/4 BSP.F		1/4 BSP.F	61.7 (2.43)	6.4 (.25)	80 (3.15)	24 (.94)
HGM-06X-P-2080					64 (2.52)	3 (.12)	82.3 (3.24)	22 (.87)
HGM-06X-2090	1 NPT	1/4 NPT	3/8-16 UNC	1/4 NPT	61.7 (2.43)	6.4 (.25)	80 (3.15)	24 (.94)
HGM-06X-P-2090					64 (2.52)	3 (.12)	82.3 (3.24)	22 (.87)

HGM-10-20/2080/2090
HGM-10-P-20/2080/2090

DIMENSIONS IN MILLIMETRES (INCHES)

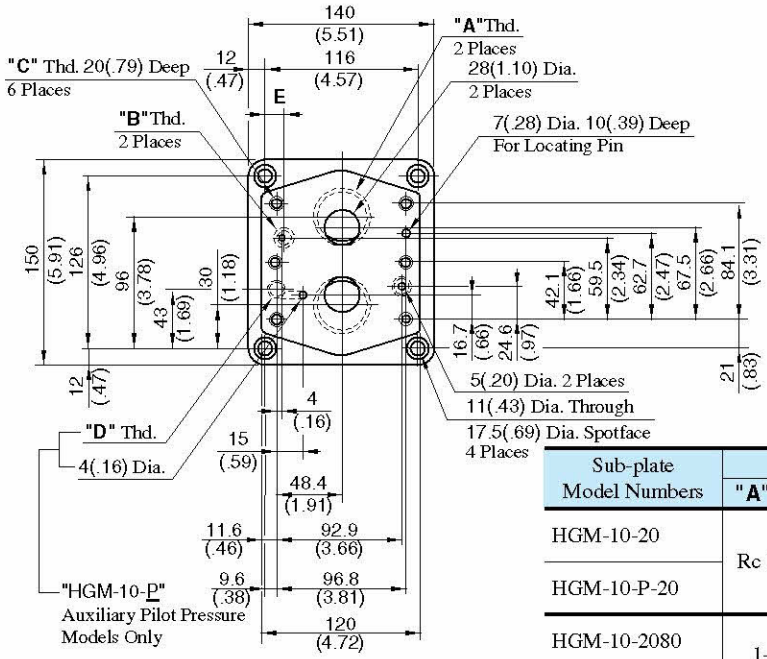

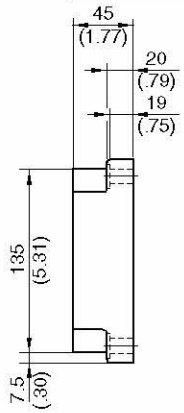

Sub-plate Model Numbers	Thread Size				mm(Inches)
	"A" Thd.	"B" Thd.	"C" Thd.	"D" Thd.	E
HGM-10-20	Rc 1-1/4	Rc 1/4	M10	Rc 1/4	13.6 (.54)
HGM-10-P-20					9.6 (.38)
HGM-10-2080	1-1/4 BSP.F	1/4 BSP.F		1/4 BSP.F	13.6 (.54)
HGM-10-P-2080					9.6 (.38)
HGM-10-2090	1-1/4 NPT	1/4 NPT	3/8-16 UNC	1/4 NPT	13.6 (.54)
HGM-10-P-2090					9.6 (.38)

HGM-10X-20/2080/2090
HGM-10X-P-20/2080/2090

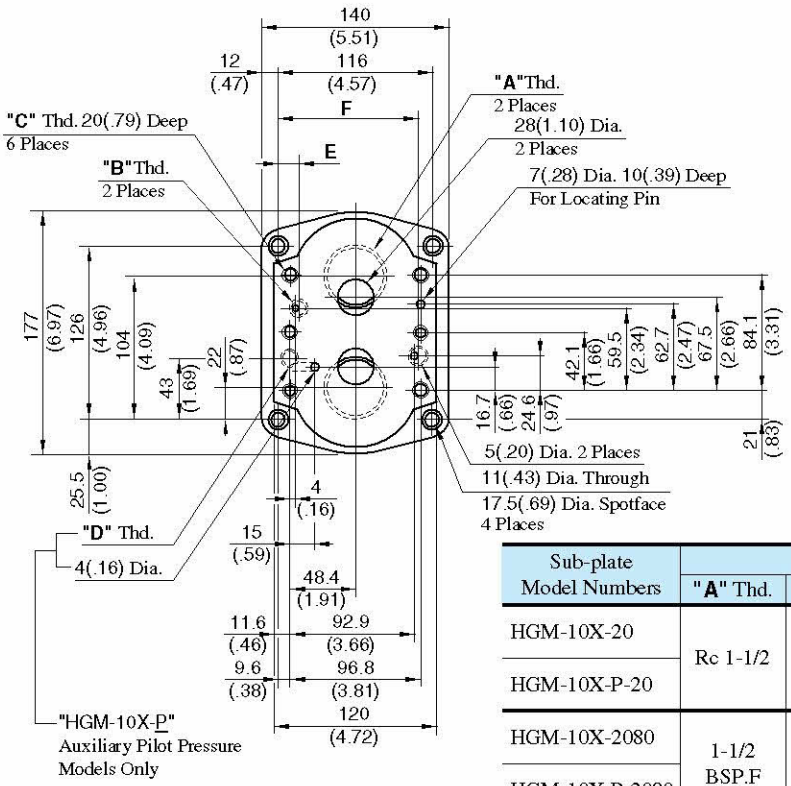

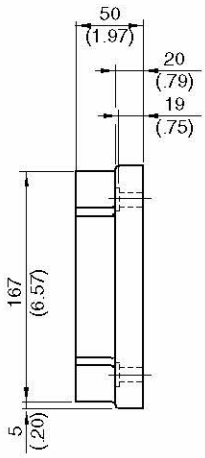

Sub-plate Model Numbers	Thead Size				mm(Inches)	
	"A" Thd.	"B" Thd.	"C" Thd.	"D" Thd.	E	F
HGM-10X-20	Rc 1-1/2	Rc 1/4	M10	Rc 1/4	13.6 (.54)	102.5 (4.04)
HGM-10X-P-20					9.6 (.38)	106 (4.17)
HGM-10X-2080	1-1/2 BSP.F	1/4 BSP.F		1/4 BSP.F	13.6 (.54)	102.5 (4.04)
HGM-10X-P-2080					9.6 (.38)	106 (4.17)
HGM-10X-2090	1-1/2 NPT	1/4 NPT	3/8-16 UNC	1/4 NPT	13.6 (.54)	102.5 (4.04)
HGM-10X-P-2090					9.6 (.38)	106 (4.17)

Pressure Drop for Reversed Free Flow

Hydraulic Fluid: Viscosity 35 mm²/s (164 SSU), Specific Gravity 0.850

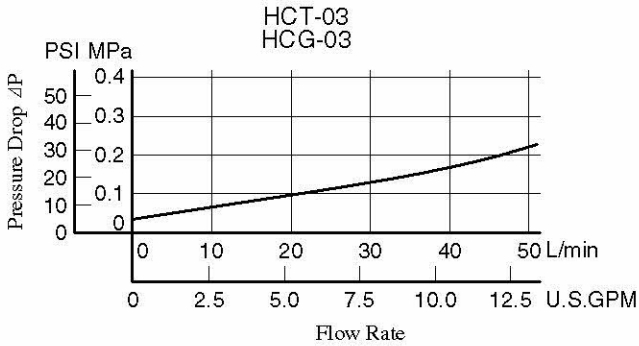

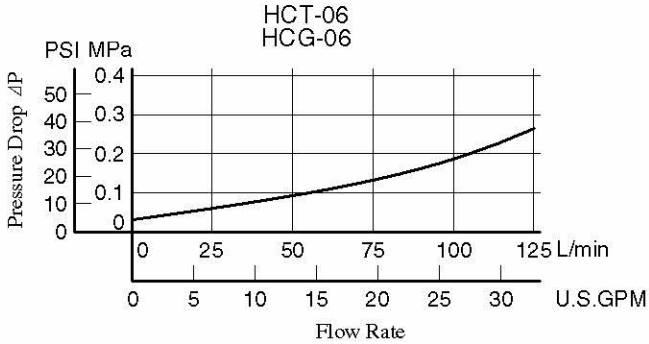

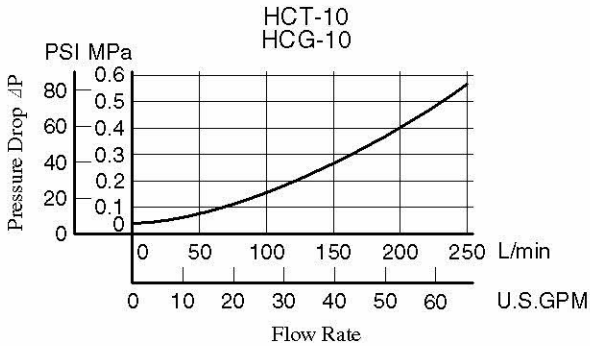

- For any other viscosity, multiply the factors in the table below.

Viscosity	mm²/s	15	20	30	40	50	60	70	80	90	100
	SSU	77	98	141	186	232	278	324	371	417	464
Factor		0.81	0.87	0.96	1.03	1.09	1.14	1.19	1.23	1.27	1.30

- For any other specific gravity (G'), the pressure drop (ΔP') may be obtained from the formula below.
  ΔP'= ΔP (G'/0.850)

Nominal Override Characteristics

Hydraulic Fluid: Viscosity 35 mm^2/s (164 SSU), Specific Gravity 0.850

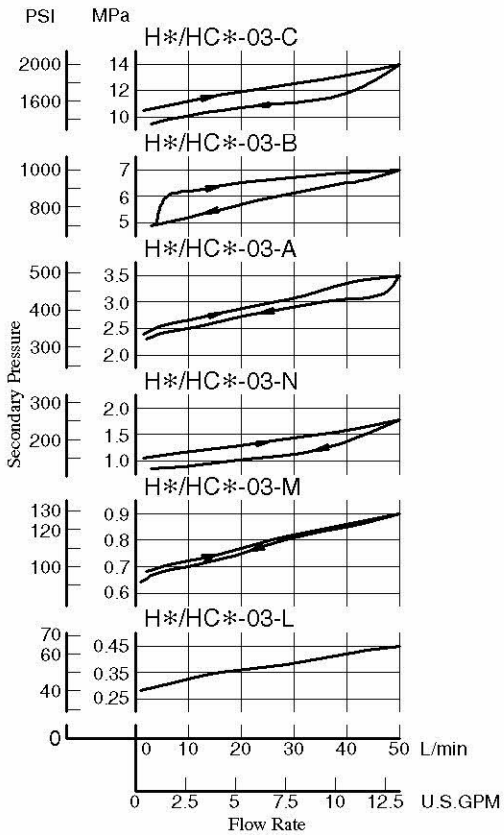

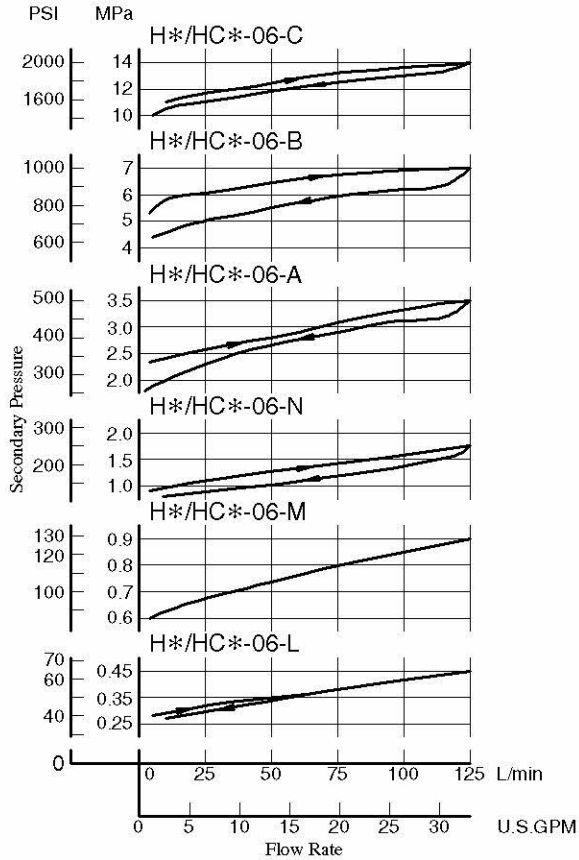

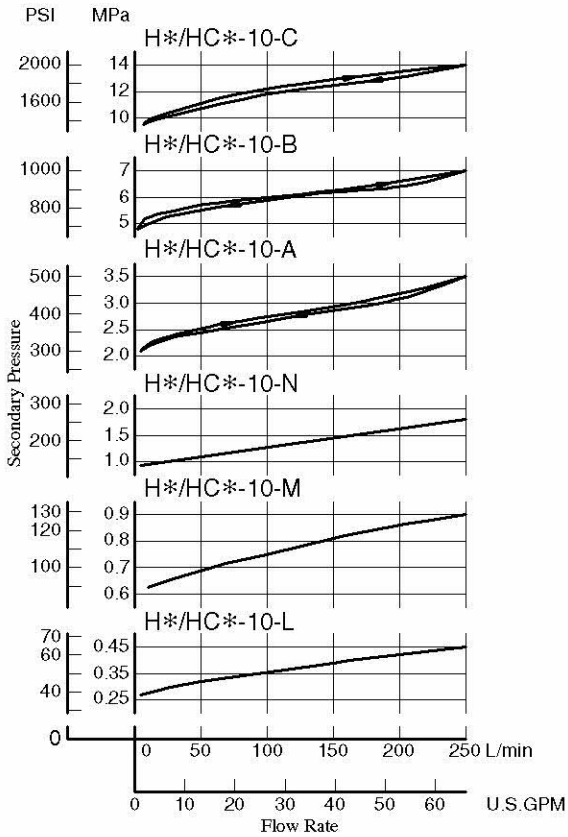

Spare Parts List

HT-03, 06, 10-✻✻-✻-22/2280/2290
HG-03, 06, 10-✻✻-✻-22/2290

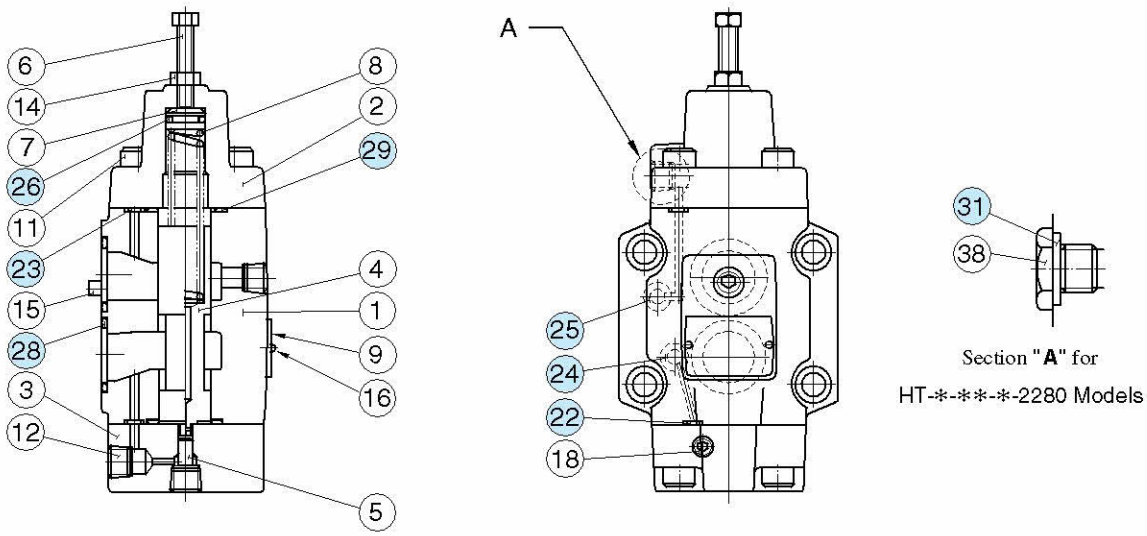

List of Seals

Item	Name of Parts	Part Numbers			Quantity	
		HT HG -03	HT HG -06	HT HG -10	HT-✻	HG-✻
22	O-Ring	SO-NB-P4	SO-NB-P4	SO-NB-P4	—	3★
23	O-Ring	SO-NB-P6	SO-NB-P6	SO-NB-P6	4	4
24	O-Ring	SO-NB-P9	SO-NB-P9	SO-NB-P9	—	1★
25	O-Ring	SO-NB-P9	SO-NB-P9	SO-NB-P9	—	2
26	O-Ring	SO-NA-P11	SO-NA-P15	SO-NA-P20	1	1
28	O-Ring	SO-NB-P18	SO-NB-P28	SO-NB-P32	—	2
29	O-Ring	SO-NB-P22	SO-NB-P28	SO-NB-P36	2	2
31	Bonded Seal	SG-FB-1/4	SG-FB-1/4	SG-FB-1/4	2	—

★ Used only for HG type with auxiliary pilot pressure (P).
Note: When ordering the seals, please specify the seal kit number from the table berow.

List of Seal Kits

Valve Model Numbers	Seal Kit Numbers
HT-03-✻✻-✻-22/2280/2290	KS-HT-03-22
HT-06-✻✻-✻-22/2280/2290	KS-HT-06-22
HT-10-✻✻-✻-22/2280/2290	KS-HT-10-22
HG-03-✻✻-22/2290	KS-HG-03-22
HG-03-✻✻-P-22/2290	KS-HG-03-P-22
HG-06-✻✻-22/2290	KS-HG-06-22
HG-06-✻✻-P-22/2290	KS-HG-06-P-22
HG-10-✻✻-22/2290	KS-HG-10-22
HG-10-✻✻-P-22/2290	KS-HG-10-P-22

Note: No bonded seals are included in the seal kits.

Spare Parts List

HCT-03, 06, 10-∗∗-∗-22/2280/2290
HCG-03, 06, 10-∗∗-∗-22/2290

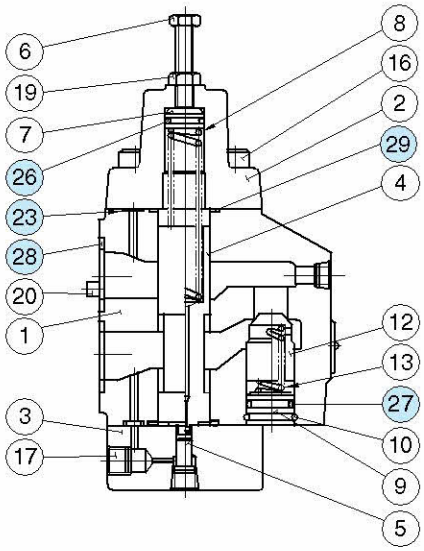

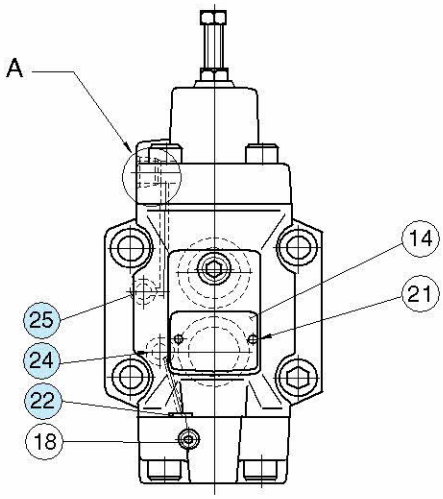

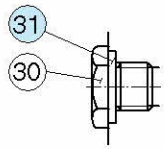

Section "**A**" for
HCT-∗-∗∗-∗-2280 Models

List of Seals

Item	Name of Parts	Part Numbers			Quantity	
		HCT HCG -03	HCT HCG -06	HCT HCG -10	HCT-∗	HCG-∗
22	O-Ring	SO-NB-P4	SO-NB-P4	SO-NB-P4	—	3★
23	O-Ring	SO-NB-P6	SO-NB-P6	SO-NB-P6	4	4
24	O-Ring	SO-NB-P9	SO-NB-P9	SO-NB-P9	—	1★
25	O-Ring	SO-NB-P9	SO-NB-P9	SO-NB-P9	—	2
26	O-Ring	SO-NA-P11	SO-NA-P15	SO-NA-P20	1	1
27	O-Ring	SO-NB-P12	SO-NB-P18	SO-NB-P22A	1	1
28	O-Ring	SO-NB-P18	SO-NB-P28	SO-NB-P32	—	2
29	O-Ring	SO-NB-P22	SO-NB-P28	SO-NB-P36	2	2
31	Bonded Seal	SG-FB-1/4	SG-FB-1/4	SG-FB-1/4	2	—

★ Used only for HCG type with auxiliary pilot pressure (P).
Note: When ordering the seals, please specify the seal kit number from the table below.

List of Seal Kits

Valve Model Numbers	Seal Kit Numbers
HCT-03-∗∗-∗-22/2280/2290	KS-HCT-03-22
HCT-06-∗∗-∗-22/2280/2290	KS-HCT-06-22
HCT-10-∗∗-∗-22/2280/2290	KS-HCT-10-22
HCG-03-∗∗-22/2290	KS-HCG-03-22
HCG-03-∗∗-P-22/2290	KS-HCG-03-P-22
HCG-06-∗∗-22/2290	KS-HCG-06-22
HCG-06-∗∗-P-22/2290	KS-HCG-06-P-22
HCG-10-∗∗-22/2290	KS-HCG-10-22
HCG-10-∗∗-P-22/2290	KS-HCG-10-P-22

Note: No bonded seals are included in the seal kits.